Patent for united wireless multimedia system (uwms)

УКРАЇНА UKRAINE

ПАТЕНТ

НА КОРИСНУ МОДЕЛЬ

№ 36562

ТЕЛЕРАДІОІНФОРМАЦІЙНА СИСТЕМА, ЩО ПОЄДНАНА З СИСТЕМОЮ ЗБИРАННЯ ВІДЕОІНФОРМАЦІЇ (UWMS)

Видано відповідно до Закону України "Про охорону прав на винаходи і корисні моделі".

Зареєстровано в Державному реєстрі патентів України на винаходи 27.10.2008.

Голова Державного департаменту інтелектуальної власності М.В. Паладій

Significant increases in the transferred information volume due to sector antennas system and frequencies reuse, formations in the digital TV transmitters multifrequency group signals consisting of several radio-frequency transfer channels and several direct channels of information signals transfer, opportunity of two types user's station service: for TV broadcasting signals reception and information reports transmit/receive, for TV broadcasting signals reception only, essential function expansion due to connection of the video information gathering system having two-level structure.

UKRAINIAN PATENT № 36562, 27.10.2008

P. Ksenzenko, M. Boichenko, P. Himich,

payday loans with easy approval
A. May, V. Yakimenko

"ROKS"-company

The invention concerns to special microwave communication technics which provides data transfer and reception on radio communication channels. The device in which the central station structure includes at least one base station WiMAX with sector antennas which quantity does not exceed quantity of the base stations WiMAX connected to server (main system computer) and the access server of the central station has access to a given external network, for example, the Internet networks with an opportunity of data transmission between subsystems DVB-S and WiMAX thus subsystems WiMAX and DVB-S servers are connected to Central Station server access port (1) is known.

Lack of the specified device is that the increase in quantity of interactive subscribers is reached due to addition of additional subsystems structurally not connected with the basic system in the form of data reception and transmission "point-to-multipoint" networks that does system of more bulky increasing served subscribers quantity but not adding thus of any new functions. Besides in considered system opportunities of services only TV broadcasting independed granting are limited. From the resulted device design it is completely not clear how in the given system transmitter it is possible to organize a multifrequency group signal and transfer up to 200 TV programs, in view of that fact, that at use of standard DVB-S transferred on one carrier signals quantity does not exceed eight. In the same case when data in the direct channel multiplex with a television broadcasting signals in transport stream MPEG-2 uniform to separate television programs from data downstream it is possible only by means of dear professional receiver-decriptor instead of household tuner DVB-S that economically it is not justified completely.

Most to relatives from the devices applied to the same purpose as declared the device which includes central and user's stations is, and the structure of the Central Station includes at least one receive-transmit trunk including the transmitter which output through diplexer is connected to the antenna, and the receive path (downconverter) which input through diplexer is connected to the antenna, and an output - to the divider block.

The head reception station including the downconverter which output is connected to an input of the divider block which outputs are connected to demodulation blocks, and a computer to which demodulation blocks (2) are connected is entered into structure of the Central Station. The specified device is chosen as the prototype.

In the specified device one transmitter on which from an information server one digital stream acts is used. As bit rate of the given digital stream is limited (does not exceed 41 Mbps) also opportunities of the information great volumes transfer also are limited. Roughly is up to 10 digital TV programs at compression under standard MPEG-2 or up to 15 programs at compression MPEG-4 AVC. If to consider, that in the same datastream should be transferred also and data the Internet becomes obvious that the system is rigidly limited on volume of the transfered information. As a matter of fact, it is intended only for Internet data transmission, and its application for TV broadcasting has applied character.

To the reasons which interfere with achievement of expected technical result at use of the known device the impossibility of video information great volumes transfer maintenance in the central station direction and reception of this information by the Central Station concerns. The known device is not capable to solve a specified problem because in it the organization of a video information gathering system in any kind is not stipulated, and in structure of its Central Station opportunities for branch of a video information gathering system from signals of return channels signals of return data transmission network are not stipulated.

The task in view is solved owing to that the declared device has the Central Station and a video information gathering system thus the Central Station has the antenna system including N sector antennas according to which the Central Station has N segments each of which includes the sector antenna which is connected by an input-output with diplexer which is connected by an output to the downconverter which is connected by an output to a multichannel power divider which by N outputs is connected to the modem which is connected by an input-output to a Central Station digital platform, and by an output is connected to the combiner which is connected by an output with diplexer, and the combiner is connected to a power divider output which is connected by an input to the multichannel combiner which by N outputs is connected to modulators of Central Station remultiplexing block, and the multichannel power divider of each of segments is connected by an output to the receiver of a video information gathering system, the digital platform of the Central Station is connected by an output to the Central Station computer, and the video information gatheting system includes a video information gatheting post both transferring stationary and mobile video information gathering points, and the video information gathering post is connected to the Central Station.

Proceeding from specified below, combination of the specified attributes and set of essential attributes of the multimedia system incorporated with a video information gathering system provides occurrence of new invention technical properties which are connected with maintenance of increase in the transferred information volume due to sector antennas system and a frequencies

reuse, formations in transmitters of multifrequency group signals which consist of several digital TV radio-frequency channels and several direct channels of information signals transfer, opportunities of two types user's service stations, namely, - for TV broadcasting signals receiving and transmit/receive of information reports and for TV broadcasting signals receiving essential function expansion due to addition of the video information gathering system having two-level structure.

Ability of a video information great volumes gathering raises consumer qualities of multimedia systems which are usually intended for TV and radio broadcastings, and also an exchange of information reports between the Central Station and user's stations set. Needs for a video information great volumes gathering which acts from a plenty of video information gathering points (cameras placing points) to a video information gathering post and further to the system Central Station can be caused by necessity of the videoreporting or video surveillance realization behind the distributed objects lot. Connection in one system of multimedia system and a video information gathering system functions allows to raise efficiency of the specified device use considerably.

The essence of the offered invention is explained by the Fig. on which the multimedia system incorporated with a video information gathering system block diagram is represented.

The multimedia system incorporated with a video information gathering system consists of following basic elements (Fig.): the Central Station 1, a video information gathering system 2, and user's stations 3.

The Central Station (CS) 1 consists of segments 4 which quantity depends on CS antenna system sectors quantity (from 1 up to 8 sectors). Each of segments 4 consists of the sector antenna 5 which on an input is connected by the upconverter 7, and on an output - with the downconverter 8. The upconverter is connected by 8 output to a multichannel power divider 9 which by N outputs is connected to the modem 10, and by an output is connected to the receiver of a video information gathering system. The modem 10 is connected by input-output to a digital platform 12, by an output is connected to the combiner 11 which is connected by an output to the upconverter 7. The digital platform 12 by N inputs-outputs is connected to modems 10 of N CS segments 4, and by an output is connected to main CS computer (server) which has an output to external distributive networks. The multichannel CS power divider 13 by N outputs is connected to combiners 11 of N segments 4, and by an input is connected to CS multichannel combiner 14 which by N inputs is connected with N remultiplexing station modulators.

The video information gathering system 2 includes a video information gathering post 15 which is connected through air-or cable communication line with transmitting stationary 16 or only on radio lines with a mobile video information gathering point 17 and on a radio channel is connected with CS 1. The multimedia system incorporated with a video information gathering system (UWMS) (Fig.) operates as follows.

1. A television broadcasting signals (TV) formation

TV signals are formed by remultiplexing station (on Fig. 1 it is not represented). The remultiplexing station usually represents a teleport which receives signals of satellite, cable, air TV, and also signals from local studio. On CS these signals are properly processed. This processing includes decoding those signals which are coded by conditional access system (descrambling), remultiplexing transport streams with the purpose of new TV programs multiplexes formation and scrambling these streams by own system of address coding. After the specified operations necessary for formation of scrambling streams DVB-S the received datastreams are sent on modulators on which outputs obtain carriers modulated by signals of multiprogramm TV.

Modulated carriers are united in a multifrequency group signal by multichannel combiner CS 14. Further the group signal divides on power on N parts (by quantity of system segments) by means of a power divider 13. On power divider 13 outputs it is formed N spears of a group signal, each of which goes on the combiner 11 of one
CS segment 4.

2. The direct data link (a downstream) formation.

The downstream is formed by a CS modem 10 (WMTS) transmitting part. In it DVB data packages with division on time (TDM) modulate preliminary established carrier forming the direct data link. This signal is united by means of the combiner 11 with a group broadcast signal forming the full transfer direct channel for the given sector on intermediate frequency. Further this signal will be upconverted to a necessary frequencies range, amplifies, and having passed through diplexer 6 is radiated by the sector antenna 5 in the form of a beam in width 360 deg./N (where N - quantity of antenna system sectors). The signal is received by user's stations (US1 - USn) 3, and stations of kind US1 accept only broadcast signals and stations of kind USn accept both signals of an broadcasting and a signal of the direct data link.

3. The upstream transfer.

The upstream signals are transferred by stations of type USn in direction CS. Thus, methods of frequency and time multiplexing (method FDMA/TDMA) are used. At use of such distribution method a quantity the US works on one frequency and transfers messages in the form of software packages to the CS modem 10 command. These commands are built in structure of the downstream data channel in the form of the special channel (the channel of management). Such collision-free work of the US by transfer of upstream data packages is reached. By the same principle other USs similar USn which work on other frequency work also and also those from them which belong to CS segments 4 with numbers 2 … N.

4. Signaling by a video information gathering system.

A video information gathering system has two-level structure. Necessity of such construction is caused by that the signals transferred stationary 16 or mobile 17 video information gathering points can correspond to different standards, for example, DBS - for analog points and DVB-T - for digital. Besides for signals of the first level it is difficult to obtain sufficient range by transfer which would allow to transfer directly a signal on CS because of the video information gathering points transmitters limited power (especially mobile), a low arrangement of transmitting antennas, and also complex radio wave propagation conditions (absence of " line-of-sight " mode, the big number of the reflected signals presence, etc.). Inclusion in system structure of the video information gathering posts quantity which settle down so that for them " line-of-sight " mode with CS was provided allows to solve this problem. The receivers which are a video information gathering post 15 part receive and process the various signals acting from video information gathering points, and will transform them to a uniform kind (to a kind of transport streams (TS) of DVB standard). Further these TSs are multiplexed in the uniform datastream which modulates carrier on intermediate frequency. Then this signal will be upconverted on frequency and amplifies by the powerful upconverter (BUC) for the further transfer on a radio channel in direction CS.

On each CS segment 4 signals from USn and video information gathering posts15 which are located in an CS antenna 5 operative range act. The signals received by the antenna through diplexer 6 act on low noise downconverter 8 in which they amplify and will be converted to signals of intermediate frequency. Signals of intermediate frequency act on a multichannel power divider 9. This divider has outputs quantity which is equal to quantity of the CS modem 10 inputs plus one more output from which one of the received signal spears goes to video information gathering system receivers (on Fig. are not represented). As these receivers usual tuners DVB-S can be used.

The inputs quantity of the CS modem 10 is equal to quantity of frequencies to which transfer USn (method FDMA). Signals that are received and processed by the CS modem 10 form the return data link (upstream).

All operating mode organization of a data transmission network are assigned to CS modems 10 which quantity is equal to quantity of segments 4. The separate modems 10 traffics are united by CS digital platform 12, and the incorporated traffic acts on a computer (the main system computer - a server) which provides interaction with external data transmission networks.

The multimedia system incorporated with a video information gathering system (Fig.), can be realized on the basis of multimedia system MVDDS (MITRIS) which uses for transmitting the frequencies 11.7-12.5 GHz, and for receiving – 10.7-11.5 GHz. As CS modem it is used WMTS systems DOCSIS, for example, BSR2000 Motorola. By transfer of high-speed upstream with data rates till 10.24 Mbps by means of the given system it can be served in an interactive mode up to 2560 subscribers. And the maximum quantity of subscribers can reach 24000. To advantages of such system construction it is possible to carry the following: compatibility broadcast and interactive user's receivers within one system. In view of that interactive user's stations receivers in some times more dear that broadcast receivers the subscriber to whom "interactivity" it is not necessary can choose the broadcast receiver which will give to it an opportunity to receive 128 TV programs. Such approach to construction of system allows to carry out its stage-by-stage introduction in build, namely:

- at the first stage the system can be increased by addition of additional WMTS in those sectors in which the quantity of subscribers is great. Limiting opportunities of system are defined by opportunities of a digital platform;

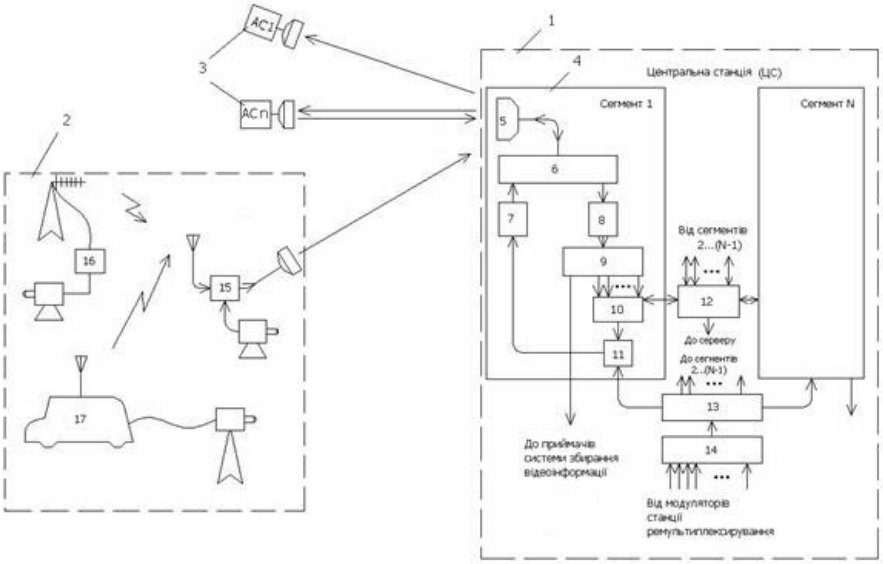

Фіг.

Fig. 1

- maximal use of the devices which are being mass production and developed earlier that will allow to lower cost of system and to raise its suitability to scaling. The offered system allows to give very wide complex of services, namely:

- multichannel (up to 128 TVC) digital TV;

- high-speed the Internet both in direct and in the return directions;

- operative reception by law enforcement bodies, bodies of local authorities and self-management, and also local television studioes of a necessary video information great volumes;

- on occassion the video information gathering system can be very useful to management of complex technological processes on manufactures which separate divisions can be disseminated on all settlement.

The declared system is quite sufficient for service of the average sizes town and in a megalopolic - for the big urban disrtrict. The declared system can give to Law Enforcement Bodies and Security Service of Traffic up to 640 video surveillance points from which transfer of high-quality images in real time is constantly conducted.

For Local Authorities - an opportunity constantly to conduct the reporting on their work it is direct from boardrooms owing to what citizens have an opportunity to receive the operative information on their work.

For local studios of TV broadcasting are constant videoreporting posts from theatrical and concert halls, stadiums and other sports constructions. And the reporting can be conducted at once by eight television cameras, in particular from mobile points, and also by wireless cameras transmitters.

Referencies:

1. Патент Украины №23044, Бюл. №6, 2007г.
2. Патент Украины №51495, Бюл. №1, 2005г. The general director of Joint-Stock Company " ROKS " P. Ksenzenko

The invention formula.

The multimedia system incorporated with a video information gathering system (UWMS) which includes the Central Station, thus the Central Station includes at least one receive/transmit trunk which includes the transmitter which output through diplexer is connected to the antenna, and a path of reception (downconverter) which input through diplexer is connected to the antenna, and an output - to the divider block, and in the Central Station structure the head receiving station which includes the downconverter which output is connected to an input of the divider block of which outputs are connected to blocks of demodulation, and a computer to which demodulation blocks are connected which differs that includes the Central Station and a video information gathering system is entered, thus the central station has the antenna system consisting from N sector antennas according to which the Central Station has N segments each of which includes the

sector antenna which is connected by an input-output with diplexer, connected on an output with the downconverter which on an output is connected to a multichannel power divider which by N outputs is connected to the modem which by an input-output is connected to a digital platform of the Central Station, and by an output is connected to the combiner which is connected by an output with diplexer, and the combiner is connected to a power divider output which is connected by an input to the multichannel combiner, which by N inputs is connected to the Central Station block remultiplexing modulators, and the multichannel power divider of each segment is connected by an output to the receiver of a video information gathering system, the digital platform of the Central Station is connected by an output to the Central Station computer, and a video information gathering system includes a video information gathering post and stationary or mobile points of a video information gathering, thus video information gathering points are connected to a video information gathering post, and the video information gathering post is connected to the Central Station.

The general director of Joint-Stock Company " ROKS " P. Ksenzenko

ABSTRACT

Object of useful model: the multimedia system incorporated with a video information gathering system (UWMS).

The Scope: the special microwave communication technics providing data transfer and reception on radio communication channels.

An essence of useful model: the multimedia system consists of the Central Station and a video information gathering system, thus the Central Station has antenna system, which includes N sector antennas according to which the Central Station has N segments each of which includes the sector antenna which is connected by an input-output with diplexer which is connected to the downconverter which is connected by an input with a multichannel power divider which by N inputs is connected to the modem which is connected by an input-output to a Central Station digital platform, and by an output is connected to the combiner which is connected by an output with upconverter which is connected by an output with diplexer, and the combiner is connected to a power divider output which is connected by an input to the multichannel combiner which by N inputs is connected to remultiplexing block modulators, and a multichannel power divider of each segment an output connected with receiver of a video information gathering system, the digital platform of the Central Station is connected by an output to a Central Station computer, and a video information gathering system includes a video information gathering post and transmitting stationary or mobile points of a video information gathering, thus video information gathering points are connected to a video information gathering post, a video information gathering post is connected to the Central Station.

Technical result: Significant increases in the transferred information volume due to sector antennas system and frequencies reuse, formations in the digital TV transmitters multifrequency group signals consisting of several radio-frequency transfer channels and several direct channels of information signals transfer, opportunity of two types user’s station service: for TV broadcasting signals reception and information reports transmit/receive, for TV broadcasting signals reception only, essential function expansion due to connection of the video information gathering system having two-level structure.